Fartreglage
By: J Stenberg

Trim R12 0..22k for motor cut off point

Trim R5 80k..180k for motor full speed

Trim D2 zener for diffrent autocut off voltage (is 5,6 volt)
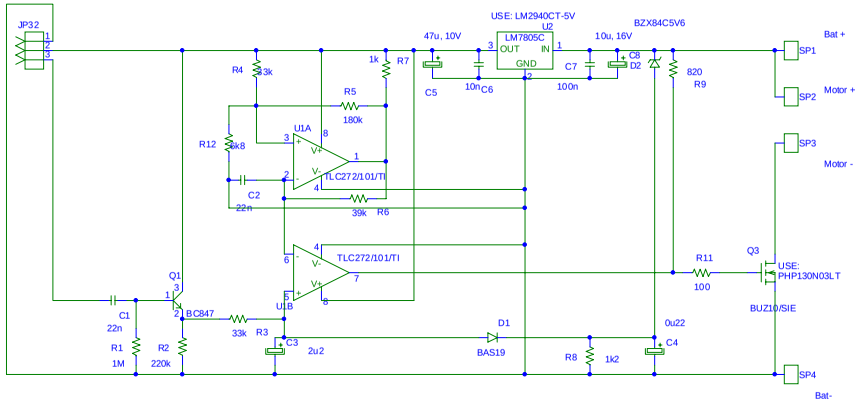
Drawing by: johan.stenberg@medair.se